COBO

PROGRAMMABLE DISPLAYS

Linea Elettronica | *Electronic Line*

TERA *Display with infotainment and with wireless connectivity support*

da pagina
from page

TERA12 HE e TERA10 HE *Description* **6**
TERA12 HE e TERA10 HE *Technical specifications* 7
TERA12 HE 8
TERA10 HE 10

TERA7 HE *Description* **14**
TERA7 HE *Technical specifications* 15

TERA7 LE *Description* **17**
TERA7 LE *Technical specifications* 18
TERA7 LE BASIC 20
TERA7 LE FULL + I/O 22
TERA7 LE EASYFIT ISOBUS 24
TERA7 LE EN15000 26
TERA7 LE FLEX 28

CANVIEW *Display for simple Graphical User Interface applications*

CANVIEW7 *Description* **32**
CANVIEW7 *technical specifications* 33

CANVIEW4 *Description* **37**
CANVIEW4 *Technical specifications* 38
CANVIEW4 STAGE V 40
CANVIEW4 STAGE V *Technical specifications* 41

CANVIEW3+ *Description* **43**
CANVIEW3+ IP66/IP65 44
CANVIEW3+ IP66/IP00 46
CANVIEW3+ IP20/IP00 48

VT3 ..... **50**
QT **51**
ISOBUS **52**
PIXTRO **53**

TERA

Cos’è un Tera?

Display grafico avanzato programmabile general purpose per applicazioni di interfaccia uomo-macchina complete, dotato di infotainment e con supporto per connettività wireless.

What is a Tera?

Advance graphics programmable general purpose display for complete Human-Machine-Interface applications, equipped with infotainment and with wireless connectivity support.

TERA12 HE e TERA10 HE

TERA7 HE
TERA7 LE

TERA12HE

TOP EXPERIENCE RIGHT AHEAD

TERA10HE

TOP EXPERIENCE RIGHT AHEAD

TERA12 HE e TERA10 HE sono i display più avanzati per il mercato off-highway. Utilizzano un processore multimediale fino a quattro core.

Le caratteristiche distintive di questi prodotti sono:

- Fluidità grafica
- Facile interazione utente
- Visibilità massima
- Connettività avanzata
- Look stile tablet

che unite a standard di progetto specifici, li rendono particolarmente adatti ai veicoli agricoli, industriali e stradali.

Supportano le librerie grafiche QT/QML che garantiscono un livello di performance ottimale del software con favolose interfacce grafiche.

TERA12 HE e TERA10 HE possono essere installati sia ad incasso che a sbalzo tramite supporto specifico.

TERA12 HE and TERA10 HE *are the high end display solution for off-highway market. They use a multimedia processor up to quad core.*

The distinguishing characteristics of these products are:

- *Smooth graphic*
- *Easy user interaction*
- *Maximum visibility*
- *Advanced connectivity*
- *Tablet-style look*

which, combined with specific project standards, make them particularly suitable for agricultural, industrial and road vehicles.

They support QT/QML graphics libraries which guarantee a level of optimal software performance with fabulous graphical interfaces.

TERA12 HE and TERA10 HE *can be installed both indash and outdash with their specific articulated support.*

Vedi pagina 48
See page 48

Vedi pagina 49
See page 49

Vedi pagina 50
See page 50

Vedi pagina 51
See page 51

TECHNICAL SPECIFICATIONS

	FULL version	BASIC version
Power supply	8 - 32V	8 - 32V
Operative temperature	- 30°C ÷ +70°C	- 30°C ÷ +70°C
Sealing degree	IP65	IP65
Main CPU	NXP i.MX6 Dual Core ARM Cortex-A9, 32 bit	NXP i.MX6 Dual Core ARM Cortex-A9, 32 bit
Frequency	800MHz	800MHz
Internal memory	8 GB Flash	8 GB Flash
RAM	1 GB	1 GB
Display	TERA10-HE: TFT 10.1", 1280 x 800 pixels, 850 cd/m², contrast ratio 800:1 TERA12-HE TFT 12.1", 1280 x 800 pixels, 500 cd/m², contrast ratio 750:1	TERA10-HE: TFT 10.1", 1280 x 800 pixels, 850 cd/m², contrast ratio 800:1 TERA12-HE TFT 12.1", 1280 x 800 pixels, 500 cd/m², contrast ratio 750:1
Orientation	16:10, Horizontal/Vertical	16:10, Horizontal/Vertical
Sun readability	✔	✔
Touchscreen	Capacitive multitouch with bonding technology (gloves compatible)	Capacitive multitouch with bonding technology (gloves compatible)
RTC	✔	✔
Wake up modes	Power supply, CAN message, ignition key	Power supply, CAN message, ignition key
Boot time	5 sec from cold boot	5 sec from cold boot
Internal temperature sensor	✔	✔
Internal accelerometer/gyroscope	✔	✔
Keys	4+4 push button on front panel 1 push button programmable also as ON/OFF (BUTTONS VERSION)	4+4 push button on front panel 1 push button programmable also as ON/OFF (BUTTONS VERSION)
Buzzer	93 dB, volume adjustable	93 dB, volume adjustable
CANBUS ports	4	2
RS232	1 port full modem 1 port Linux Terminal	1 port full modem 1 port Linux Terminal
USB ports	1 HOST external (BUTTONS VERSION) 2 HOST on connector 1 OTG Device on connector	1 HOST external (BUTTONS VERSION) 2 HOST on connector 1 OTG Device on connector
Video Input	4 PAL/NTSC simultaneous Video over IP	2 PAL/NTSC simultaneous Video over IP
Ethernet	1 port 10/100	1 port 10/100
Audio	1 Audio input port 1 Audio output port (not amplified)	✖
GPS	1 receiver with external antenna (3 mt accuracy)	✖
Bluetooth	✔	✖
Wi-Fi	✔	✖
I/O List	4 analog/digital Inputs RPM 2 Outputs Low/High Side 1A 1 Output Low Side 0.5A	✖
Connector	2 x AMP automotive 26 pin (signal) 2 x M12 8 pin (video camera)	2 x AMP automotive 26 pin (signal) 1 x M12 8 pin (video camera)
Operating system	Linux embedded	Linux embedded
Standards	EN 61000 industrial; ECE R10 automotive ISO 14982 agriculture; ISO 1173 ISOBUS	EN 61000 industrial; ECE R10 automotive ISO 14982 agriculture; ISO 1173 ISOBUS
Programming languages	C, C++, QT/QML	C, C++, QT/QML
Programming IDE	VT3, QT CREATOR	VT3, QT CREATOR

TERA 12 HE

TOP EXPERIENCE RIGHT AHEAD

PUSH BUTTONS AND TOUCHSCREEN

Display 12.1”

FISSAGGIO INDASH / *INDASH FIXING*

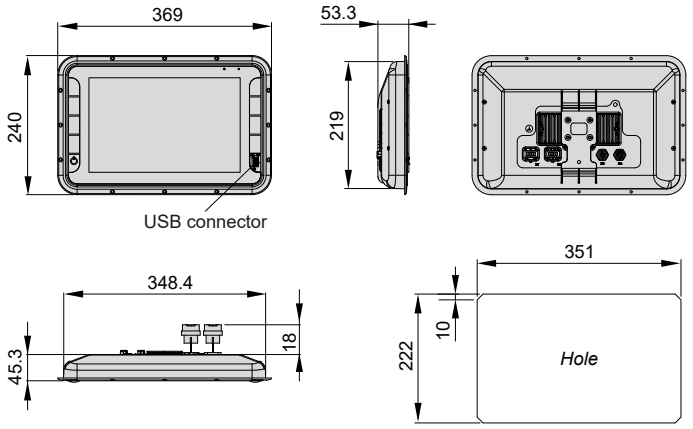

FISSAGGIO OUTDASH / *OUTDASH FIXING*

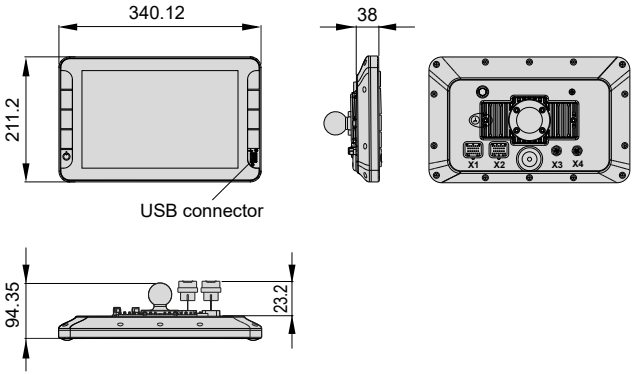

Vedi pagina 48
See page 48

Vedi pagina 49
See page 49

Vedi pagina 50
See page 50

Vedi pagina 51
See page 51

TERA 12 HE

TOP EXPERIENCE RIGHT AHEAD

TOUCHSCREEN ONLY

Display 12.1”

FISSAGGIO INDASH / *INDASH FIXING*

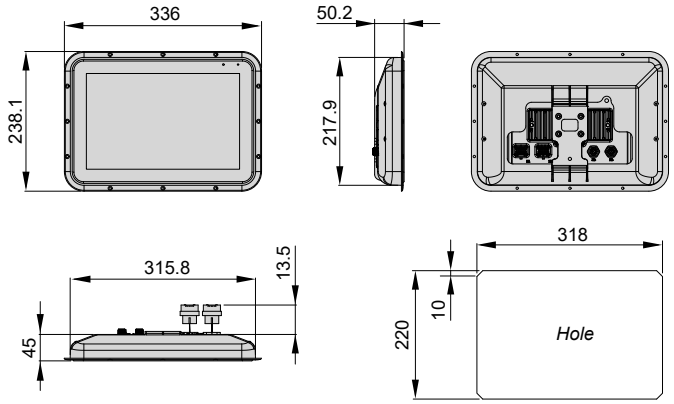

FISSAGGIO OUTDASH / *OUTDASH FIXING*

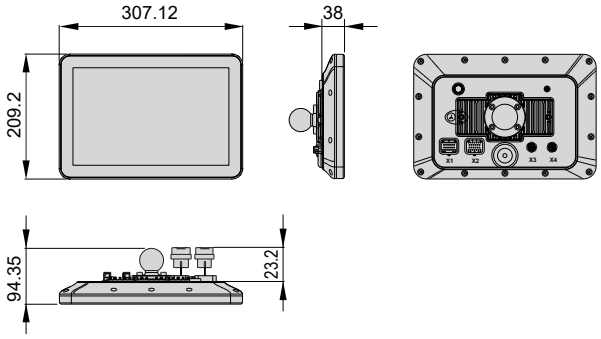

Vedi pagina 48
See page 48

Vedi pagina 49
See page 49

Vedi pagina 50
See page 50

Vedi pagina 51
See page 51

TERA 10 HE

TOP EXPERIENCE RIGHT AHEAD

PUSH BUTTONS AND TOUCHSCREEN

Display 10.1”

FISSAGGIO INDASH / *INDASH FIXING*

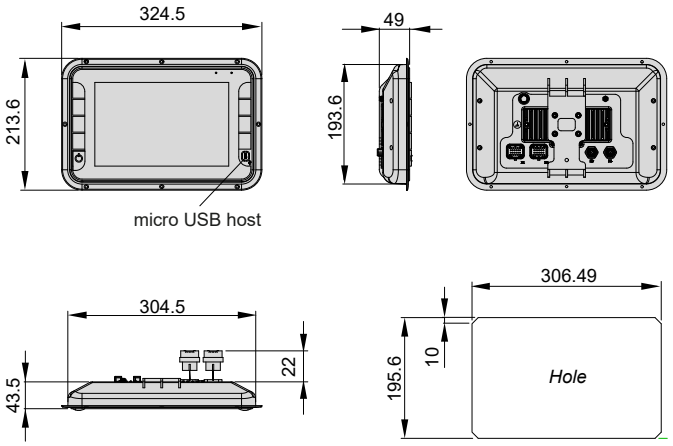

FISSAGGIO OUTDASH / *OUTDASH FIXING*

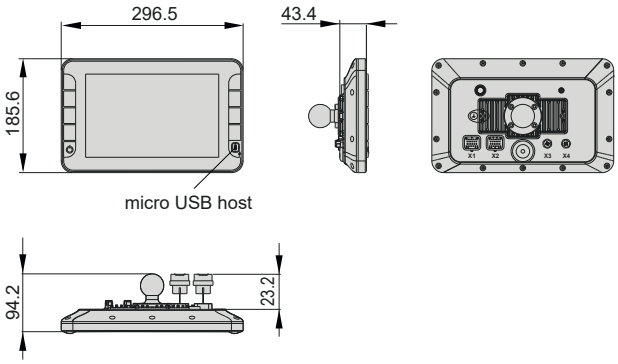

Vedi pagina 48
See page 48

Vedi pagina 49
See page 49

Vedi pagina 50
See page 50

Vedi pagina 51
See page 51

TERA 10 HE

TOP EXPERIENCE RIGHT AHEAD

TOUCHSCREEN ONLY

Display 10.1”

FISSAGGIO INDASH / *INDASH FIXING*

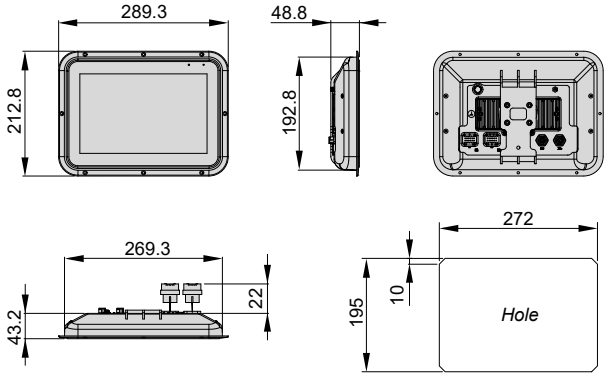

FISSAGGIO OUTDASH / OUTDASH FIXING

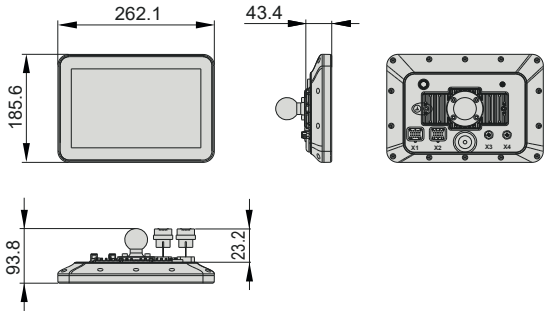

Vedi pagina 48
See page 48

Vedi pagina 49
See page 49

Vedi pagina 50
See page 50

Vedi pagina 51
See page 51

ORDER CODE GUIDE

TERA12 HE 12.1” TFT DISPLAY

Size LCD	*Specifications*	*Push buttons*	*Fixing*	Order code Pkg. Q.ty 1
12"	FULL	Push buttons and touchscreen	Indash	1083588
			1034764 “RAM mount ™” Outdash	1084269
		Touchscreen only	Indash	1083586
			1034764 “RAM mount ™” Outdash	1084268
	BASIC	Push buttons and touchscreen	Indash	1089558
			1034764 “RAM mount ™” Outdash	1051270
		Touchscreen only	Indash	1089557
			1034764 “RAM mount ™” Outdash	1051268

ORDER CODE GUIDE

TERA10 HE 10.1" TFT DISPLAY

Size LCD	Specifications	Push buttons	Fixing	Order code Pkg. Q.ty 1
10"	FULL	Push buttons and touchscreen	Indash	1085947
			1034764 "RAM mount ™" Outdash	1083501
		Touchscreen only	Indash	1085946
			1034764 "RAM mount ™" Outdash	1083500
	BASIC	Push buttons and touchscreen	Indash	1089554
			1034764 "RAM mount ™" Outdash	1089552
		Touchscreen only	Indash	1089553
			1034764 "RAM mount ™" Outdash	1089550

TERA7HE

TOP EXPERIENCE RIGHT AHEAD

TOUCH KEYS

TERA7 HE è il nuovo display COBO di fascia alta, progettato specificamente per il mercato dei veicoli off-highway, che richiedono un'interfaccia operatore esteticamente gradevole e robusta con grafica di ultima generazione.

Le caratteristiche distintive che lo rendono uno dei display più all'avanguardia offerti al mercato sono:

- Massima leggibilità in qualsiasi condizione di luce
- Grafica veloce e fluida
- Interazione utente ottimale

Progettato secondo i più elevati standard industriali e agricoli per applicazioni sia esterno che interno cabina, in tutte le severe condizioni ambientali e di utilizzo tipiche di questi settori.

Il software di programmazione permette una massima flessibilità nelle interfacce grafiche, il display può essere installato sia in posizione orizzontale che verticale per coprire ogni esigenza di installazione.

***TERA7 HE** is the new COBO high end display, specifically designed for the off-highway vehicles market that requires an aesthetically pleasing and robust operator interface with latest generation graphics.*

The distinctive features that make it one of the most advanced displays on the market are:

- *Top readability in any light conditions*
- *Fast and smooth graphics*
- *Optimal user interaction.*

Designed according to the highest industrial and agricultural standards for both outside and inside cab applications, in all the severe environmental and use conditions typical of these sectors.

The programming software allows maximum flexibility in graphic interfaces, the display can be installed both horizontally and vertically to cover any installation need.

Display 7”

Vedi pagina 48
See page 48

Vedi pagina 49
See page 49

Vedi pagina 51
See page 51

TECHNICAL SPECIFICATIONS

Power supply	10 - 32V
Operating temperature	- 30°C ÷ +70°C
Sealing degree	IP66
Main CPU	ARM Cortex-A7 dual + ARM Cortex-M3, 32 bit
Frequency	650MHz
Internal memory	8 GB Flash
RAM	1 GB
Display	TFT 7" IPS, 800 x 480 pixels Brightness 1000 cd/m², Contrast ratio 1200:1 Optical bonding technology
Orientation	Horizontal Vertical*
Sun readability	✔
Touchscreen	Capacitive multitouch Working gloves operable
RTC	✔
Wake up modes	Ignition key, CAN message
Boot time	<1 sec. splash screen, <5 sec. full graphic
Internal temperature sensor	✔
Internal accelerometer/gyroscope	✔
Keypad	8 touch buttons with backlight
Buzzer	90 dB @ 30 cm
CANBUS ports	2
RS232	1
USB ports	1 HOST on housing side 1 OTG connector
Video Input	2 Analog PAL/NTSC 1 Digital via BroadR-Reach*
Ethernet	1 BroadR-Reach*
Audio	1 Audio Mic input* 1 Audio LINE Stereo output (not amplified)*
Bluetooth	✔*
Wi-Fi	✔*
I/O List	2 analog inputs 2 digital Inputs 2 RPM inputs 2 Low Side outputs 1A 2 High Side outputs 1A
Connector	1 x AMP Superseal 34 pin
Operating system	Linux embedded
Standards	Industrial, road vehicles, agriculture, ISOBUS*
Programming languages	C, C++, QT/QML*
Programming IDE	VT3

*Optional upon request

FISSAGGIO OUTDASH / *OUTDASH FIXING*

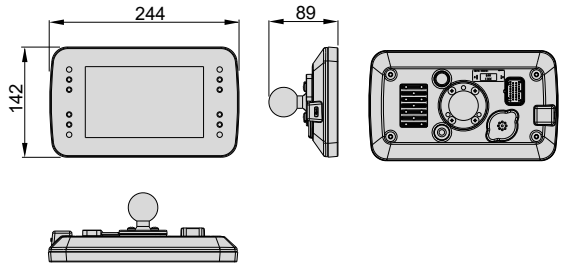

ORDER CODE GUIDE

TERA7 HE 7" DISPLAY

Size LCD	*Specifications*	*Keys*	*Fixing*	**Order code** **Pkg. Q.ty 1**
7"	**HORIZONTAL**	Touch keys and touchscreen	Indash	**1101435**
			1034764 "RAM mount ™" Outdash	**1100434**

TERA7 LE (BASIC - FULL + I/O - EASYFIT ISOBUS - EN15000 - FLEX)

TERA7 LE è un monitor con display da 7" (WVGA 800x480) con tecnologia LED e processore ARM™ a 32 bit, 532 Mhz.
Può essere fornito di pannello frontale:

- senza tasti
- con 15 tasti
- con touchscreen tecnologia "glass-on-glass".

Il vetro frontale è antigraffio e disponibile con trattamento anti condensa solo per la versione senza touchscreen.

Progettato per soddisfare anche le richieste ambientali più difficili.
Basato su sistema operativo Linux fast boot, **TERA7 LE** è la soluzione ideale per qualsiasi applicazione HMI di fascia medio-alta. E' dotato di porte CANBUS, USB e di 2 ingressi videocamera PAL/NTSC.

TERA7 LE è completamente programmabile utilizzando il tool di sviluppo software , COBO IDE proprietario, che unisce un'interfaccia grafica WYSIWYG intuitiva e programmazione con lo standard IEC61131 per la gestione I/O.
TERA7 LE può essere installato sia orizzontalmente che verticalmente a seconda delle esigenze del cliente, sia ad incasso che a sbalzo tramite supporto specifico. E' disponibile anche nella versione certificata ISOBUS.

***TERA7 LE** is a 7" (WVGA 800x480) monitor with display with LED technology and 32 bit, 532 Mhz ARM™ processor.*
It can be supplied:

- *Without keypad*
- *With 15 push buttons*
- *With "glass-on-glass" technology touchscreen*

Front glass is scratchproof and it can be provided with antifog treatment only for the version without touchscreen.

Designed to meet also the harshest environmental requests.
*Based on fast boot Linux OS, **TERA7 LE** is the ideal HMI solution for any middle-high end application.It features CANBUS ports, USB ports, and 2 PAL/NTSC video camera inputs.*

***TERA7 LE** is fully programmable using software development tool, COBO proprietary IDE, that combines intuitive WYSIWYG graphic programming with IEC61131 standard for I/O management.*

***TERA7 LE** can be installed both horizontally and vertically depending on the customer needs, both indash and outdash with its specific articulated supports. It is also available the certified ISOBUS version.*

Display 7"

Disponibile integrato nella colonnetta VDS

Available integrated in the VDS column

Maggiori informazioni:
www.cobogroup.net -> cataloghi -> driving -> colonnette sterzo

More info:
***www.cobogroup.net** -> catalogues -> drving -> steering column groups*

Vedi pagina 48
See page 48

TECHNICAL SPECIFICATIONS

		Power Supply	Operative Temperature	Storage Temperature	Sealing degree	Display	Main CPU	Keypad	CANBUS ports	Connector
TOUCHSCREEN	**TERA 7 LE BASIC** (page 20)	8 - 32V	- 40°C ÷ + 75°C	- 40°C ÷ + 85°C	IP65	- TFT active matrix color display. HORIZONTAL AND VERTICAL - Diagonal size: 7", 15:9 - Resolution: 800 x 480 pixel (WVGA) - Active area: 152,4 x 91,4 mm - LED white backlight - Contrast ratio: 600:1 - Horizontal viewing angle: 130° - Vertical viewing angle: 110°	iMX356 (32 bit, ARM11, 532MHz)	Without keypad or with 15 push buttons	2	Tyco Ampseal 26 pin
TOUCHSCREEN	**TERA 7 LE FULL + I/O** (page 22)	8 - 32V	- 40°C ÷ + 75°C	- 40°C ÷ + 85°C	IP65	- TFT active matrix color display, HORIZONTAL AND VERTICAL - Diagonal size: 7", 15:9 - Resolution: 800 x 480 pixel (WVGA) - Active area: 152,4 x 91,4 mm - LED white backlight - Contrast ratio: 600:1 - Horizontal viewing angle: 130° - Vertical viewing angle: 110°	iMX356 (32 bit, ARM11, 532MHz)	Without keypad or with 15 push buttons	2	Tyco Superseal 35 pin
TOUCHSCREEN	**TERA 7 LE EASYFIT ISOBUS** (page 24)	8 - 32V	- 40°C ÷ + 75°C	- 40°C ÷ + 85°C	IP65	- TFT active matrix color display, HORIZONTAL - Diagonal size: 7", 15:9 - Resolution: 800 x 480 pixel (WVGA) - Active area: 152,4 x 91,4 mm - LED white backlight - Contrast ratio: 600:1 - Horizontal viewing angle: 130° - Vertical viewing angle: 110°	iMX356 (32 bit, ARM11, 532MHz)	15	2	Tyco Superseal 35 pin, 1 DB9 (RS232),1
	TERA 7 LE EN15000 (page 26)	8 - 32V	- 40°C ÷ + 75°C	- 40°C ÷ + 85°C	IP65	- TFT active matrix color display, HORIZONTAL - Diagonal size: 7", 15:9 - Resolution: 800 x 480 pixel (WVGA) - Active area: 152,4 x 91,4 mm - LED white backlight - Contrast ratio: 600:1 - Horizontal viewing angle: 130° - Vertical viewing angle: 110°	iMX356 (32 bit, ARM11, 532MHz) + 2 Freescale 8 bit 40Mhz	15	2	Tyco Superseal 26 pin
TOUCHSCREEN	**TERA 7 LE FLEX** (page 28)	8 - 32V	- 40°C ÷ + 80°C	- 40°C ÷ + 85°C	IP66	- TFT active matrix color display, HORIZONTAL AND VERTICAL - Diagonal size: 7" - Resolution 800 x 480 pixel - Active area 152,4 x 91,4 mm - White LED backlight - Contrast ratio: 500 - Horizontal viewing angle: 60° - Vertical viewing angle: 50°	iMX356 (32 bit, ARM11, 532MHz)	Without keypad or with 5 push buttons	2	2 off M12, 8 poli

TECHNICAL SPECIFICATIONS

USB ports	Touchscreen	RS232	Video input	RAM	Internal memory	SD	Ethernet	I/O	Operating system	Clock	Buzzer	LED	Safety standards
1	✔ (resistive "glass on glass" technology)	1	2 (PAL/NTSC individually activated)	128 + 128 (optional) MB	256 MB Flash	✖	✖	✖	Linux	Real Time Clock	✔	✖	✖
1	✔ (resistive "glass on glass" technology)	2	2 (PAL/NTSC individually activated)	256 MB	256 MB	Slot Only	✔	Optional	Linux	Real Time Clock	✔	✖	✖
1	✔ (resistive "glass on glass" technology)	2	2 (PAL/NTSC individually activated)	256 MB	256 MB	Slot Only	✖	✖	Linux	Real Time Clock	✔	✖	✖
1	✖	2	2 (PAL/NTSC individually activated)	256 MB	256 MB	Slot Only	✖	✖	Linux	Real Time Clock	✔ controlled by a separate electronic	4 LEDs (green, yellow, red) controlled by a separate electronic	EN15000
✖	✔ (resistive "glass on glass" technology)	✖	2 (PAL/NTSC individually activated)	125 MB	256 MB	Slot Only	✖	✖	Linux	Real Time Clock	✔	✖	✖

TERA7 LE BASIC

Display 7”

FISSAGGIO INDASH / *INDASH FIXING*

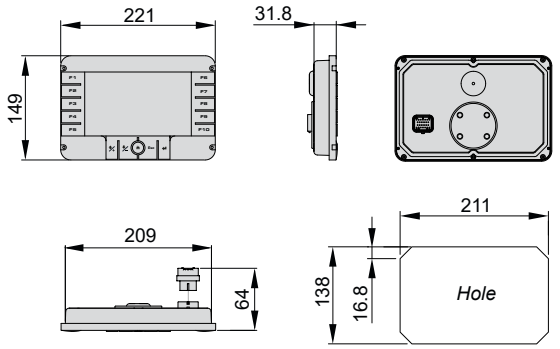

FISSAGGIO OUTDASH / *OUTDASH FIXING*

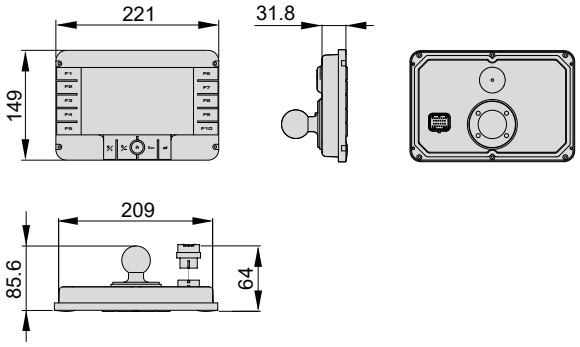

Vedi pagina 48
See page 48

ORDER CODE GUIDE

TERA7 LE BASIC 7” DISPLAY

Size LCD	Specifications	Push buttons	Fixing	Order code Pkg. Q.ty 1
7"	HORIZONTAL	Push buttons and touchscreen	4xUNI 5931 M3 Indash	1033292 grey
				1056443 black
			1034764 “RAM mount ™” Outdash	1033297
		Push buttons only	4xUNI 5931 M3 Indash	1052651 antifog
			1034764 “RAM mount ™” Outdash	1075345 antifog
		No touchscreen and no push buttons	4xUNI 5931 M3 Indash	1053665 no antifog
	VERTICAL	Push buttons only	4xUNI 5931 M3 Indash	1058016 no antifog

TERA7 LE FULL + I/O

Display 7”

FISSAGGIO INDASH / *INDASH FIXING*

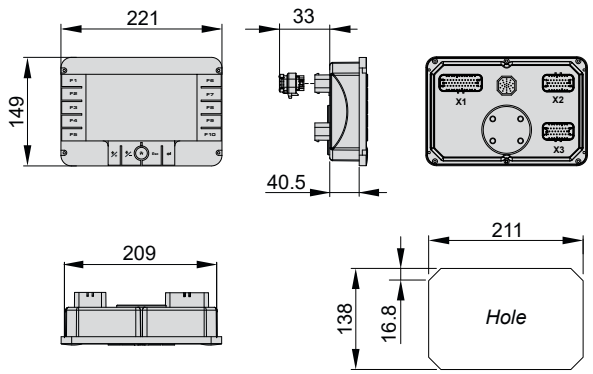

FISSAGGIO OUTDASH / *OUTDASH FIXING*

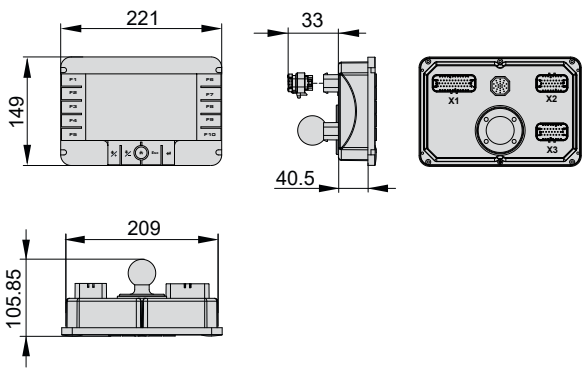

Vedi pagina 48
See page 48

ORDER CODE GUIDE

TERA7 LE FULL + I/O 7” DISPLAY

Size LCD	Specifications	Push buttons	Fixing	Order code Pkg. Q.ty 1
7"	HORIZONTAL	Push buttons and touchscreen	4xUNI 5931 M3 Indash	1075444 no antifog
			1034764 “RAM mount ™” Outdash	1075451 no antifog
		Push buttons only	4xUNI 5931 M3 Indash	1051202 no antifog
			1034764 “RAM mount ™” Outdash	1051235 no antifog

TERA7 LE EASYFIT ISOBUS (UT & TC)

TERA7 LE EASYFIT è una versione speciale di TERA7 LE; sono disponibili il tasto di accensione, la porta seriale RS232 e la porta USB sul pannello posteriore.
Questa versione è stata progettata appositamente per:

- Kit attachment ISOBUS
- Sistemi retrofit e generici

per una comoda installazione ed utilizzo in cabine esistenti.

È certificato AEF ISOBUS ed è disponibile con la sola funzionalità UT o con entrambe: UT e TC.

La funzione UT - Universal Terminal (Terminale Universale) consente di controllare tutti gli attrezzi compatibili ISOBUS, offre la possibilità di azionare un'attrezzatura da qualunque terminale, oltre che di utilizzare un solo terminale per azionare attrezzature differenti.

La funzione TC - Task Controller (Section Control e Variable Rate) consente di gestire automaticamente sezioni parziali, ad esempio su spargitori di prodotti fitosanitari e di fertilizzanti o seminatrici monograno, per poter lavorare con precisione sull'appezzamento.

***TERA7 LE EASYFIT** is a special version of TERA7 LE; the power button, the RS232 serial port and the USB port are available on the rear panel.*

This version was designed specifically for:

- *ISOBUS attachment kits*
- *Retrofit and generic systems*

for an easy installation and use in existing cabins.

It is ISOBUS AEF certified and it is available with only UT functionality or with both: UT and TC.

The UT - Universal Terminal function allows you to control all ISOBUS compatible implements, offers the ability to operate an implement from any terminal, as well as to use a single terminal to operate different implements.

The TC - Task Controller (Section Control and Variable Rate) function allows you to automatically manage partial sections, for example on spreaders of plant protection products and fertilizers or single-grain seeders, in order to work with precision on the land.

Display 7"

Vedi pagina 48
See page 48

Vedi pagina 50
See page 50

FISSAGGIO OUTDASH / *OUTDASH FIXING*

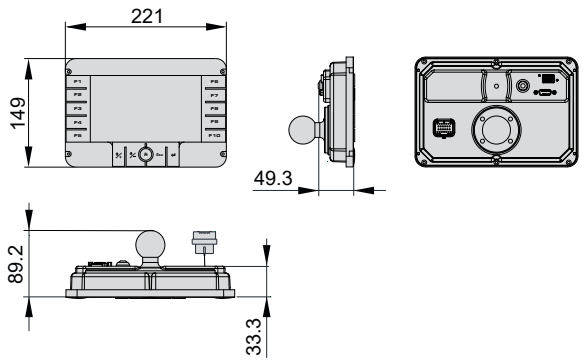

ORDER CODE GUIDE

TERA7 LE EASYFIT ISOBUS 7" DISPLAY

Size LCD	*Specifications*	*Push buttons*	*Fixing*	**Order code** **Pkg. Q.ty 1**
7"	**UT** **HORIZONTAL**	Push buttons and touchscreen	**1034764** "RAM mount ™" Outdash	**1077147**
	UT+TC **HORIZONTAL**	Push buttons and touchscreen	**1034764** "RAM mount ™" Outdash	**1077148**

TERA7 LE EN15000

TERA7 LE EN15000 è una versione di TERA7 pensata per le applicazioni in cui è richiesta la certificazione EN15000 (nei mezzi di sollevamento).

E' dotata di una scheda aggiuntiva a doppio microprocessore che gestisce:
- I led di segnalazione (verde, giallo, rosso)
- il buzzer di allarme

in modo da ottemperare alla norma di riferimento.

Questa soluzione integrata permette un uso agevole del display come corpo unico, senza ulteriori componenti o cablaggi.

TERA7 LE EN15000 *is a version of TERA7 designed for applications where EN15000 certification is required (lifting equipment).*

It is equipped with an additional double microprocessor board that manages:
- *Warning LEDs (red, yellow, green)*
- *Alarm buzzer*

in order to comply with the reference standard.

This integrated solution allows an easy use of this display as single component, without additional components or wiring.

Display 7”

Vedi pagina 48
See page 48

FISSAGGIO INDASH / *INDASH FIXING*

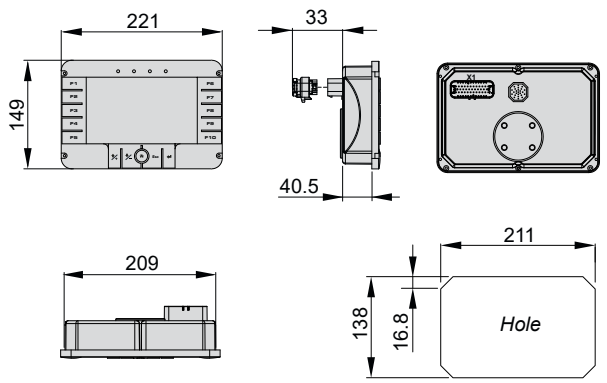

FISSAGGIO OUTDASH / *OUTDASH FIXING*

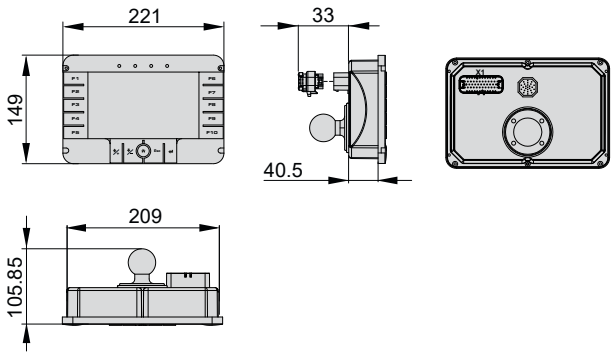

ORDER CODE GUIDE

TERA7 LE EN 15000 7" DISPLAY

Size LCD	*Specifications*	*Push buttons*	*Fixing*	**Order code** **Pkg. Q.ty 1**
7"	**HORIZONTAL**	Push buttons only	4xUNI 5931 M3 Indash	**1082167**
			1034764 "RAM mount ™" Outdash	**1086941**

TERA7 LE FLEX

TERA7 LE Flex è un display a 7” (WVGA 800x480) con tecnologia a LED e processore ARM ™ a 32 bit.
E’ disponibile in due versioni:

- Senza tasti
- Con 5 tasti

Può essere provvisto, come optional, di touchscreen con vetro “glass-on-glass” impermeabile e antigraffio. Progettato per soddisfare i requisiti ambientali più severi.

Basato su sistema operativo Linux, **TERA7 LE Flex** è la soluzione ideale per qualsiasi applicazione HMI di fascia medio-alta. E’ dotato di 2 ingressi videocamera PAL/NTSC, porta USB e due CANBUS. **TERA7 LE Flex** è programmabile, utilizzando l’ambiente di sviluppo software , COBO IDE proprietario, che unisce un’interfaccia WYSIWYG intuitiva e programmazione grafica con lo standard IEC61131 per la gestione I/O.

TERA7 LE Flex può essere installato sia orizzontalmente che verticalmente a seconda delle esigenze del cliente, su plancia con relativi supporti specifici.

TERA7 LE Flex *is a monitor with a 7” (WVGA 800x480) display with LED technology and 32 bit ARM™ processor.*
It is equipped:

- *With 5 push buttons*
- *Or without keypad*

It is provided with a waterproof glass-on-glass scratchproof touchscreen as optional. Designed to meet the harsh environment.

Based on Linux OS, ***TERA7 LE Flex*** *is the ideal HMI solution for any middle-high end application. It is provided with two PAL/NTSC video camera input, USB port, and two CANBUS.* ***TERA7 LE Flex*** *is fully programmable using software development tool, COBO proprietary IDE, that combines intuitive WYSIWYG graphic programming with IEC61131 standard for I/O management.*

TERA7 LE Flex *could be installed both horizontally and vertically depending on the customer needs, out-dash with its specific articulated supports.*

Display 7”

HORIZONTAL

FISSAGGIO OUTDASH / *OUTDASH FIXING*

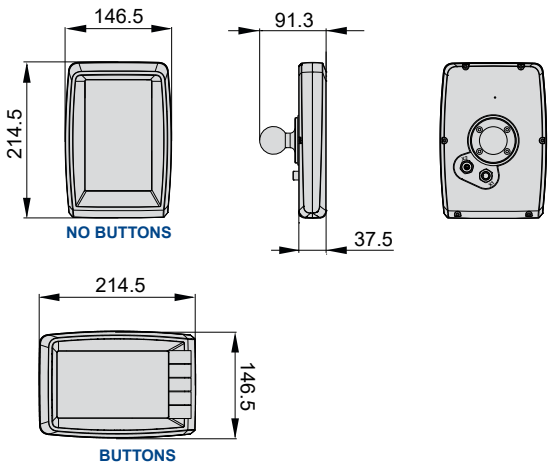

Display 7”

VERTICAL

Vedi pagina 48
See page 48

ORDER CODE GUIDE

TERA7 LE FLEX 7” DISPLAY

Size LCD	Specifications	Push buttons	Fixing	Order code Pkg. Q.ty 1
7"	HORIZONTAL	Touchscreen only	1034764 “RAM mount ™” Outdash	1033277
		Push buttons and touchscreen	1034764 “RAM mount ™” Outdash	1033285
		Push buttons only	1034764 “RAM mount ™” Outdash	1033286
7"	VERTICAL	Touchscreen only	1034764 “RAM mount ™” Outdash	1052649
		Push buttons only	1035774 *“KS202”* Outdash	1033273
		Push buttons and touchscreen	1034764 “RAM mount ™” Outdash	1033284

CANVIEW

Cos’è un Canview?

Display programmabile general purpose di livello base per applicazioni di interfaccia utente grafica semplici ed efficaci.

What is a Canview?

Entry level programmable general purpose display for beautiful simple and effective Graphical User Interface applications.

CANVIEW7

CANVIEW4
CANVIEW4 STAGE V

CANVIEW3+

CANVIEW7

CANVIEW7 è il nuovo display programmabile general purpose, progettato specificamente per il mercato dei veicoli off-highway, che richiedono un'interfaccia operatore esteticamente gradevole e robusta.

Le caratteristiche distintive sono:
- Massima leggibilità in qualsiasi condizione di luce
- Grafica eccellente
- Interfaccia utente moderna

Progettato secondo i più elevati standard industriali e agricoli per applicazioni sia esterno che interno cabina, in tutte le severe condizioni ambientali e di utilizzo tipiche di questi settori.

Il software di programmazione permette una massima flessibilità nelle interfacce grafiche, il display può essere installato sia in posizione orizzontale che verticale per coprire ogni esigenza di installazione.

***CANVIEW7** is the new programmable general purpose display, specifically designed for the off-highway vehicles market that requires an aesthetically pleasing and robust operator interface.*

The distinctive features are:
- *Top readability in any light conditions*
- *Excellent graphics*
- *Modern user interface*

Designed according to the highest industrial and agricultural standards for both outside and inside cab applications, in all the severe environmental and use conditions typical of these sectors.

The programming software allows maximum flexibility in graphic interfaces, the display can be installed both horizontally and vertically to cover any installation need.

Display 7”

Vedi pagina 48
See page 48

	TECHNICAL SPECIFICATIONS
Power supply	10 - 32VDC
Operating temperature	- 30°C ÷ +70°C
Microprocessor	ARM Cortex-A7 dual + ARM Cortex-M3, 32 bit
RAM	1 GB DDR3L
Flash memory	8 GB eMMC
EEPROM memory	512Kb
Consumption	Max 2A / 700mA @12V typ.
Standby consumption	<2mA
Inputs	n. 2 Analogue video inputs, exclusively switchable n. 8 Internal analogue inputs
CAN bus	2 lines (1 CAN + 1 CANFD), 2.0B high speed
USB Host/Slave on main connector	Yes, with the possibility of supplying a 5V/500mA voltage (Host)
Ethernet	1 Ethernet 10/100 BASE-T1 BroadR-Reach module
Serial peripheral	RS-232 (Valid for 05810006 and 05810009)
Power switch	Yes, on th erear (Valid for 05810006 and 05810009)
USB Host/Slave on auxiliary connector	Yes, with the possibility of supplying a 5V/500mA voltage (Host) (Valid for 05810006 and 05810009)
LCD	7" TFT with LVDS decoder with TOUCH PAD layer
Active Area	152.40(L)x91.44(A)mm
Resolution	800xRGBx480
Brightness	Max 1000Cd/m2²
Guaranteed UV life	100h with 1KW xenon lamp (Distance between lamp and device 300±20mm)
Internal temperature sensor	1 NTC sensor
TFT temperature sensor	1 NTC sensor
Ambient brightness sensor	2
Warning lights	2 LEDs on both sides (amber on the right and red on the left) (Valid for versions with touch keys) 1 red LED above display (Valid for versions without touch keys)
Backlight indicators	8 LEDs vertically organized on both sides for white backlighting of TOUCH buttons (Valid for versions with touch keys)
IP Protection grade	IP66
Body material	Black ASA
Software	Model 1: Development with COBO VT3 Visual Tool Model 2: Development with COBO VT3 Visual Tool + Third Party component Model 3: Development with Third Party Component. Complete user application on COBO BSP
E marking Regulation	UN/ECE-R10 REV. 6
CE marking Directive	2014/53/EU
EMC standard Regulation	EN 61000-62:2019 ETSI EN 301 489-1 V.2.2.3 - ETSI EN 301 489-17 V3.2.4 CISPR25 Edition 4.0 2016-10
Electrical standards Regulation	ISO 7637-2:2011 ISO 16750-:2012 ISO 10605:2008
Personal safety standards Regulation	EN IEC 62311:2020 ETSI EN 300 328 V2.2.2 - ETSI EN 301 893 V2.1.1 EN IEC 62368-1:2020/A11:2020
Mechanical and climatic standards Regulation	ISO 15184:2012

CANVIEW7 - KEYS

FISSAGGIO OUTDASH / *OUTDASH FIXING*

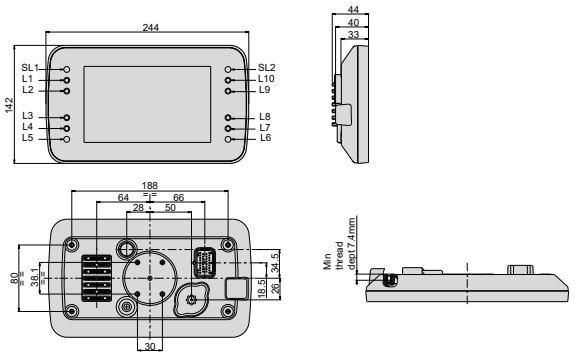

1110274

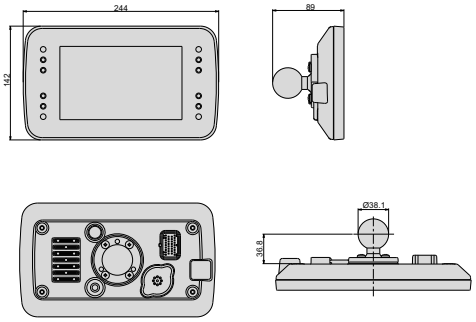

1110275

FISSAGGIO INDASH / *INDASH FIXING*

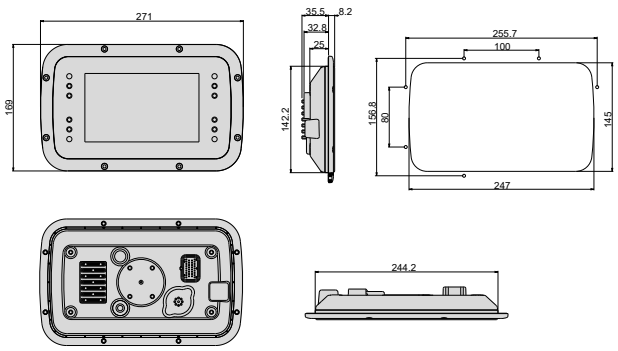

1110277

CANVIEW7 - NO KEYS

FISSAGGIO OUTDASH / *OUTDASH FIXING*

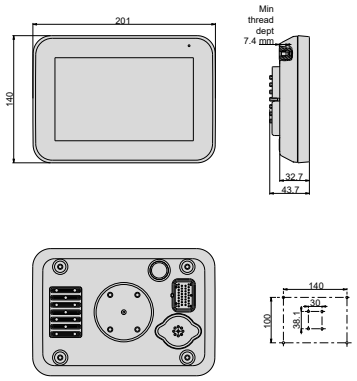

1104582

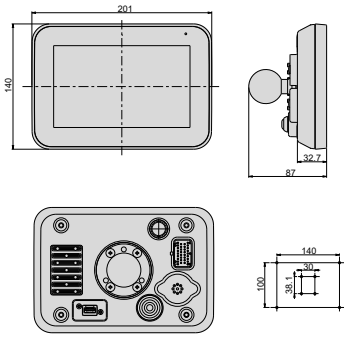

1104646 / 1107293 / 1107294

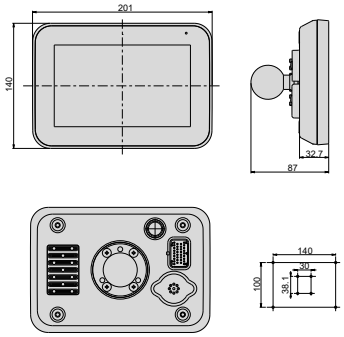

1109360

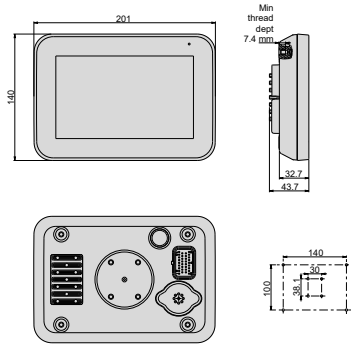

1109645

FISSAGGIO INDASH / *INDASH FIXING*

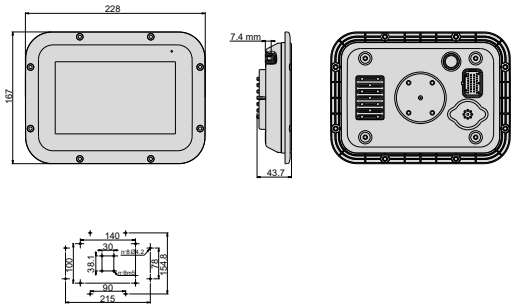

1104585

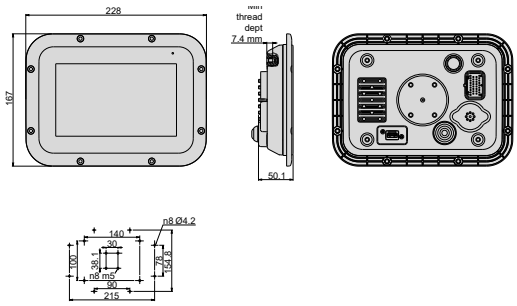

1109402

ORDER CODE GUIDE

CANVIEW7 7” DISPLAY

Display Orientation (Landscape / Portrait)	Push Buttons	Installation	Fixing	Preinstalled Software	Order code
HORIZONTAL / VERTICAL	Buttons	Outdash		None	1110274
		Outdash		None	1110275
		Indash		None	1110277
	No Buttons	Outdash		None	1104582
		Indash		None	1104585
		Outdash		None	1104646
		Outdash		UT, ISOBUS licence	1107293
		Outdash		UT + TC, ISOBUS licence	1107294
		Outdash		None	1109360
		Indash		None	1109402
		Outdash		None	1109645

CANVIEW4

CANVIEW4 è un display 4.3” programmabile general purpose, con un’ampia gamma di applicazioni.

Le caratteristiche distintive di questo prodotto sono:
- Compatto
- Stile moderno
- Velocità
- Dimensione memoria

che, unite a standard molto elevati di robustezza a condizioni ambientali gravose, lo rendono adatto a qualunque applicazione ed applicabile sia all’interno cabina che all’esterno.

CANVIEW4 *is a general purpose programmable 4.3” size display, with a wide range of applications.*

The distinguishing characteristics of the product are:
- *Compact*
- *Modern style*
- *Speed*
- *Wide memory*

which, combined with very high standards of ruggedness against harsh environmental conditions, make it suitable for any application and appllicable both inside the cabin and outside.

Display 4.3”

BUTTONS

Display 4.3”

NO BUTTONS

Vedi pagina 48
See page 48

TECHNICAL SPECIFICATIONS

Power supply	*8 - 32V*
Operating temperature	*- 40°C ÷ +75°C*
Sealing degree	*IP65 rear version without buzzer* *IP60 rear version with buzzer* *IP66 front no buttons version* *IP67 and IP69k front buttons version*
Display	*TFT 4.3", 480 x 272 pixels, 700* cd/m², *contrast ratio 600:1*
Main CPU	*ARM Cortex M4, 32 bit*
Frequency	*180 MHz*
FLASH Memory	*16MB*
RAM Memory	*16MB*
Sun readability	✔
RTC	✔
Wake up mode	*Power supply, CAN message*
Boot time	*1 sec*
Internal temperature sensor	✔
Keypad	*5 push buttons on front panel (silicon keypad)*
Touchscreen	*Resistive*
Buzzer	*65 dB Blind version, otherwise 85 dB*
CANBUS ports	*2*
RS232	*1 (TX/RX)*
USB ports	*1*
*Video Input**	*1 PAL/NTSC standard input*
*I/O List**	*2 analog/digital Inputs* *4 Outputs High Side 2A*
Connector	*AMP automotive 26 pin*
Standards	*CE* *EMC industrial, automotive*
Programming	*VT3 tool*

**Optional upon request*

FISSAGGIO INDASH / *INDASH FIXING*
disponibile su richiesta / *available on request*

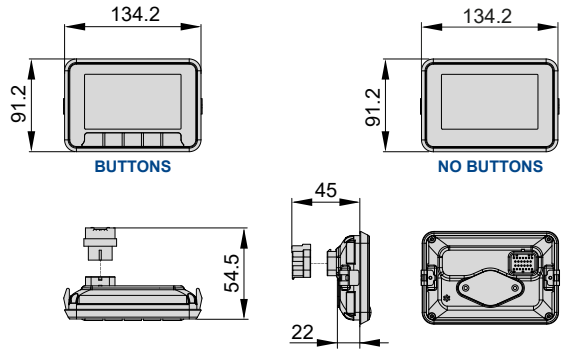

FISSAGGIO OUTDASH / *OUTDASH FIXING*

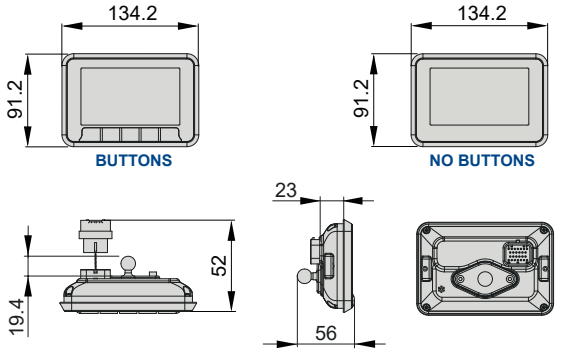

ORDER CODE GUIDE

CANVIEW4 4.3” DISPLAY

Specifications	*Keys*	*Fixing*	*Seeling degree*	Order code Pkg. Q.ty 1
BUTTONS	No touchscreen	2x springs Indash	IP65 Lower buzzer volume	1093949
			IP60 Higher buzzer volume	1093946
		1034761 “RAM mount ™” Outdash	IP65 Lower buzzer volume	1093948
NO BUTTONS	No touchscreen	2x springs Indash	IP65 Lower buzzer volume	1095399
		1034761 “RAM mount ™” Outdash	IP65 Lower buzzer volume	1094358
	Touchscreen	2x springs Indash	IP60 Higher buzzer volume	1093945
		1034761 “RAM mount ™” Outdash	IP65 Lower buzzer volume	1093944

CANVIEW4 PER MOTORI STAGE V / FOR STAGE V ENGINES

Il display CANVIEW 4 Stage V nasce per venire incontro alle esigenze di mercato di avere uno strumento compatto e pronto all'uso conforme alle normative vigenti in termini di emissioni (Stage V ready).

Grazie al display è possibile:
- Tenere sotto controllo le prestazioni del motore selezionato
- Avere un feedback sugli eventuali segnali di errore durante le fasi di lavoro della macchina.

Lo strumento da la possibilità di avere 3 stili di interfaccia grafica e di gestire il pedale acceleratore (analogico o CAN-BUS) direttamente dal menù di configurazione dello strumento.

The CANVIEW 4 Stage V display was created to meet the market needs of having a compact and ready-to-use instrument compliant with current regulations in terms of emissions (Stage V ready).

Thanks to the display it is possible:
- *Monitor the performance of the selected engine*
- *Get feedback on any error signals during the working phases of the machine.*

The instrument gives the possibility to have 3 graphic interface styles and to manage the accelerator pedal (analogue or CAN-BUS) directly from the instrument configuration menu.

Display entry level general purpose per la gestione dati J1939 dei motori Stage V:
Kubota - Kohler - Deutz - VM - Yanmar - Perkins - FPT

Display entry level general purpose for the J1939 data management of Stage V engines:
Kubota - Kohler - Deutz - VM - Yanmar - Perkins - FPT

Purchase code	Pkg Q.ty
1097456	1

Display 4.3"

CARATTERISTICHE PRINCIPALI

Il display da la possibilità di visualizzare:

- RPM
- Temperatura acqua
- Pressione olio
- Ore motore (CANBUS)
- Livello urea
- Codici SPN e FMI
- Spia avaria motore rossa
- Spia warning motore gialla
- Alternatore
- Riscaldamento (candelette)
- Inibizione DPF
- DPF rigenerazione necessaria
- DPF rigenerazione in corso
- Acqua nel carburante
- Gestione pedale acceleratore (CANBUS & analogico)

MAIN FEATURES

The display allows to visualize:

- *RPM*
- *Water temperature*
- *Oil pressure*
- *Engine hours (CANBUS)*
- *Urea level*
- *SPN and FMI codes*
- *Red malfunction indicator of the engine*
- *Yellow warning indicator of the engine*
- *Alternator*
- *Heating (glow plugs)*
- *DPF inhibition*
- *DPF regeneration needed*
- *DPF regeneration in progress*
- *Water in the fuel*
- *Throttle pedal management (CANBUS & analog)*

Vedi pagina 48
See page 48

TECHNICAL SPECIFICATIONS

Power supply	*8 - 32V*
Operating temperature	*- 40°C ÷ +75°C*
Sealing degree	*IP60 rear version with buzzer* *IP67 and IP69k front buttons version*
Display	*TFT 4.3", 480 x 272 pixels, 700 cd/m², contrast ratio 600:1*
Main CPU	*ARM Cortex M4, 32 bit*
Frequency	*180 MHz*
FLASH Memory	*16MB*
RAM Memory	*16MB*
Sun readability	✔
RTC	✔
Wake up mode	*Power supply, CAN message*
Boot time	*1 sec*
Internal temperature sensor	✔
Keypad	*5 push buttons on front panel (silicon keypad)*
Buzzer	*65 dB Blind version, otherwise 85 dB*
CANBUS ports	*2*
RS232	*1 (TX/RX)*
USB ports	*1*
*Video Input**	*1 PAL/NTSC standard input*
*I/O List**	*2 analog/digital Inputs* *4 Outputs High Side 2A*
Connector	*AMP automotive 26 pin*
Standards	*CE* *EMC industrial, automotive*
Programming	*VT3 tool*

**Optional upon request*

FISSAGGIO INDASH / *INDASH FIXING*

disponibile su richiesta / *available on request*

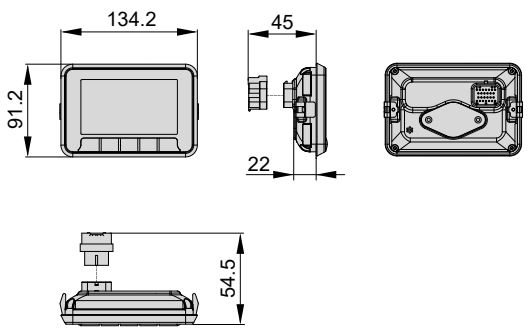

FISSAGGIO OUTDASH / *OUTDASH FIXING*

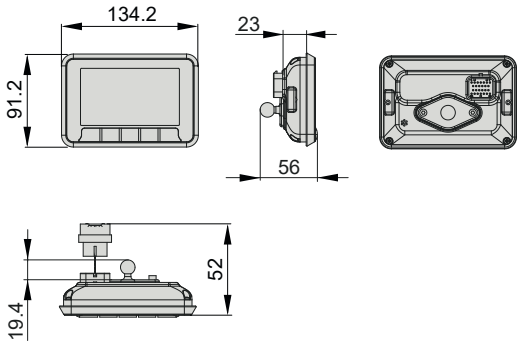

1034761
"RAM mount ™" mounting support

CANVIEW3+

CANVIEW3+ è un display monocromatico 3” programmabile, di ridotte dimensioni ed utilizzabile per ogni applicazione su macchine.

- Compatto
- Stile moderno

Progettato secondo i più severi standard industriali.

Disponibile in versione con o senza touchscreen.

Tutte le funzioni e le logiche del pannello (display LCD e buzzer) possono essere personalizzate per mezzo di un tool di programmazione di proprietà COBO ( ).

Può essere installato in cabina o all’esterno e supporta fissaggio a sfera o a pannello.

***CANVIEW3+** is a general purpose programmable 3” monochromatic display, with small dimensions and suitable for any machine application.*

- *Compact*
- *Modern looking*

Designed to work under the hardest industrial standard requirements.

Available with or without touchscreen.

All the logics and the functions of the cluster (LCD display and buzzer) can be customised using programming tool of COBO property ( ).

It can be installed in-cabin or outdoor, and sports RAM fixing or dash mounting.

Vedi pagina 48
See page 48

CANVIEW3+ IP66/IP65

HORIZONTAL

VERTICAL

TECHNICAL SPECIFICATIONS

Power supply	*9 - 32V*
Operating temperature	*- 30°C ÷ +75°C*
Storage temperature	*- 35°C ÷ +85°C*
Sealing degree	*IP66 front* *IP65 rear*
Size	*113,4 x 72,9 mm*
Connector	*1 x Deutsch DT Series 8 pins*
Mating connector	*Deutsch DT06-08SA*
CANBUS ports	*1 Serial comunication line (125 / 250 / 500 kbaud/s) without the 120R termination resistor*
LCD Display	*dot matrix 176 x 80*
Orientation	*It can be used in horizontal or vertical position*
Backlight	*white (LED)*
Buzzer	*1 integrated buzzer dirven by microprocessor*
Fixing	*panel mount with springs or RAM-mount*
Touchscreen	*available version with resistive touchscreen**
I/O List	*1 Digital input that can be used as a frequency input* *2 Analog inputs*
Frame	*ABS;* *black*
Applications	*compliant with VT3,* *Winscope and Winloader*

**Optional upon request*

Vedi pagina 48
See page 48

FISSAGGIO INDASH / *INDASH FIXING*

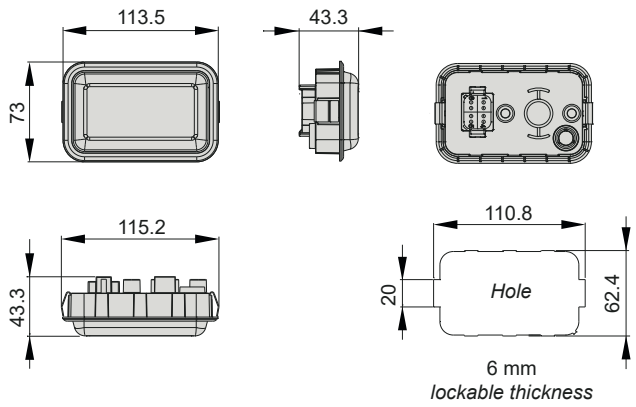

FISSAGGIO OUTDASH / *OUTDASH FIXING*

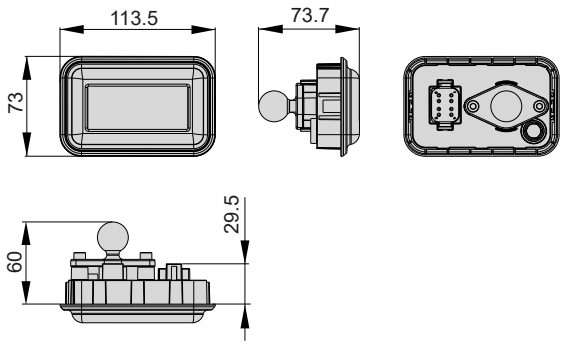

ORDER CODE GUIDE

CANVIEW3+ IP66/IP65 3” DISPLAY

Keys	*Fixing*	*Frame colour and dimension*	*Sealing degree*	**Order code**
No touchscreen	2x springs Indash	**Black** **113.5 x 73 mm**	**IP66 front** **IP65 rear**	**1082017** Pkg. Q.ty 1 **1058140** Pkg. Q.ty 35
	1034761 “RAM mount ™” Outdash	**Black** **113.5 x 73 mm**	**IP66 front** **IP65 rear**	**1076520** Pkg. Q.ty 35
	2xM5 screws Screw	**Black** **113.5 x 73 mm**	**IP66 front** **IP65 rear**	**1081721** Pkg. Q.ty 1
Touchscreen	2x springs Indash	**Black** **113.5 x 73 mm**	**IP66 front** **IP65 rear**	**1076870** Pkg. Q.ty 1 **1058137** Pkg. Q.ty 35
	1034761 “RAM mount ™” Outdash	**Black** **113.5 x 73 mm**	**IP66 front** **IP65 rear**	**1078827** Pkg. Q.ty 1 **1058138** Pkg. Q.ty 35

CANVIEW3+ IP66/IP00

HORIZONTAL

VERTICAL

TECHNICAL SPECIFICATIONS

Power supply	*9 - 32V*
Operating temperature	*- 30°C ÷ +75°C*
Storage temperature	*- 35°C ÷ +85°C*
Sealing degree	*IP66 front* *IP00 rear*
Size	*105.4 x 64.9 mm*
Connector	*1 x MOLEX MINI FIT 6 pins*
Mating connector	MOLEX Cobo 39-01-2060 + pin Cobo 39-00-0038
CANBUS ports	*1 Serial comunication line (125 / 250 / 500 kbaud/s) without the 120R termination resistor*
LCD Display	*dot matrix 176 x 80*
Orientation	*It can be used in hoizontal or vertical position*
Backlight	*white (LED)*
Buzzer	*1 integrated buzzer dirven by microprocessor*
Fixing	*panel mount with snap springs or RAM-mount*
Touchscreen	*available version with resistive touchscreen**
I/O List	*1 Digital input that can be used as a frequency input* *2 Analog inputs*
Frame	*ABS;* *black*
Applications	*compliant with VT3,* *Winscope and Winloader*

**Optional upon request*

Vedi pagina 48
See page 48

FISSAGGIO INDASH / *INDASH FIXING*

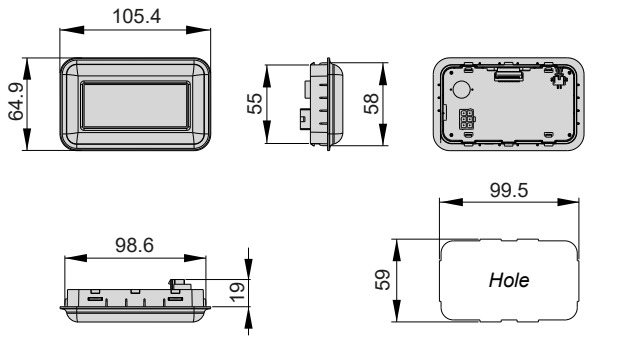

the plate thickness must be 9mm

ORDER CODE GUIDE

CANVIEW3+ IP66/IP00 3" DISPLAY

Keys	*Fixing*	*Frame colour and dimension*	*Sealing degree*	**Order code** **Pkg. Q.ty**
No touchscreen	2x springs Indash	**Black** **105.4 x 64.9 mm**	**IP66 front** **IP00 rear**	**1094244** Pkg. Q.ty 1 **1058135** Pkg. Q.ty 35
Touchscreen	2x springs Indash	**Black** **105.4 x 64.9 mm**	**IP66 front** **IP00 rear**	**1058136** Pkg. Q.ty 35

CANVIEW3+ IP20/IP00

HORIZONTAL

VERTICAL

TECHNICAL SPECIFICATIONS

Power supply	*9 - 32V*
Operating temperature	*- 30°C ÷ +75°C*
Storage temperature	*- 35°C ÷ +85°C*
Sealing degree	*IP20 front* *IP00 rear*
Size	*98.4 x 58.3 mm*
Connector	*1 x MOLEX MINI FIT 6 pins*
Mating connector	MOLEX Cobo 39-01-2060 + pin Cobo 39-00-0038
CANBUS ports	*1 Serial comunication line (125 / 250 / 500 kbaud/s) without the 120R termination resistor*
LCD Display	*dot matrix 176 x 80*
Orientation	*It can be used in horizontal or vertical position*
Backlight	*white (LED)*
Buzzer	*1 integrated buzzer dirven by microprocessor*
Fixing	*panel mount with snap springs or RAM-mount*
Touchscreen	*available version with resistive touchscreen**
I/O List	*1 Digital input that can be used as a frequency input* *2 Analog inputs*
Frame	*ABS;* *grey*
Applications	*compliant with VT3,* *Winscope and Winloader*

**Optional upon request*

Vedi pagina 48
See page 48

FISSAGGIO INDASH / *INDASH FIXING*

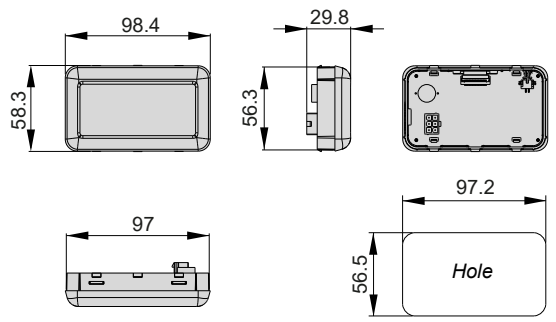

ORDER CODE GUIDE

CANVIEW3+ IP20/IP00 3” DISPLAY

Keys	*Fixing*	*Frame colour and dimension*	*Sealing degree*	**Order code** / **Pkg. Q.ty**
No touchscreen	snap springs Indash	**Grey RAL 7046 White backlight 98.4 X 58.3 mm**	**IP20 front IP00 rear**	**1098204** Pkg. Q.ty 1 **1017542** Pkg. Q.ty 35
No touchscreen	snap springs Indash	**Grey RAL 7046 White backlight 98.4 X 58.3 mm**	**IP20 front IP00 rear**	**1017550** Pkg. Q.ty 35
No touchscreen	snap springs Indash	**Warm Grey 11U White backlight 98.4 X 58.3 mm**	**IP20 front IP00 rear**	**1017552** Pkg. Q.ty 35
touchscreen	snap springs Indash	**Grey RAL 7046 White backlight 98.4 X 58.3 mm**	**IP20 front IP00 rear**	**1017544** Pkg. Q.ty 1 **1017545** Pkg. Q.ty 35

©

VT3
SOFTWARE
DEVELOPMENT
TOOLS

CAN J1939
ISOBUS - ISO11783

IEC 61131

VT3 è un potente software per il **controllo delle unità e dei display** programmabili COBO.

Usando VT3, l'utente programmatore può:

1. Sviluppare **la logica di controllo** del software applicativo secondo IEC61131:
   a. programmare i moduli organizzati in PROGRAM, FUNCTION, FUNCTION_BLOCK
   b. utilizzare **Task ciclici**
   c. dichiarare **variabili dati** di tutti i tipi specificati da IEC61131
2. Definire i messaggi CANBUS per la **comunicazione tra i dispositivi nel sistema**
3. Definire la **configurazione** dei segnali di **input** e **output**
4. Usare **4 differenti linguaggi di programmazione**:
   a. FBD: Function Block Diagram
   b. LD: Ladder Diagram
   c. ST: Structured Text
   d. C
5. *Progettare* **l'interfaccia per display grafici** con uno strumento WYSIWYG:
   a. importare **formati d'immagine** (bmp, png, gif,....)
   b. usare **font Windows**
   c. progettare **oggetti grafici** (gauge, testi, istogrammi, ...)

VT3 is a powerful tool for the programming of COBO **controller units and displays**.

With VT3, the developer can:

1. *Program **control logic** using IEC1131 standards:*
   a. program using PROGRAM, FUNCTIONS and FUNCTION_BLOCKS modules
   *b. use **cyclic Tasks***
   *c. define **data variables** of all types specified by IEC1131*
2. *Define CANBUS data for **network communication of devices in the system***
3. *Define **I/O** mapping signal **configuration***
4. *Use **4 different programming languages**:*
   a. FBD: Function Block Diagram
   b. LD: Ladder Diagram
   c. ST: Structured Text
   d. C
5. *Design the **interface of graphic displays** with a WYSIWYG tool:*
   *a. import **images formats** (bmp, png, gif,....)*
   *b. use **Windows fonts***
   *c. design **graphic objects** (gauges, texts, histograms, ...)*

QML (Qt Meta Language o Qt Modelling Language) è una specifica dell'interfaccia utente e un linguaggio di programmazione di QT Company.

- Consente a sviluppatori e designer di creare **applicazioni altamente performanti**, animate in modo **fluido** e visivamente **accattivanti**.
- È un linguaggio dichiarativo che consente di descrivere le **interfacce utente** in termini di **componenti visive** e di **come interagiscono e si relazionano tra loro**.
- È un linguaggio altamente leggibile che è stato progettato per consentire ai **componenti** di essere **interconnessi in modo dinamico** e consente di **riutilizzare e personalizzare facilmente** i componenti all'interno di un'interfaccia utente.

QML (Qt Meta Language o Qt Modelling Language) is a user interface specification and programming language of QT Company.

- *It allows developers and designers alike to* **create highly performant***,* **fluidly** *animated and visually* **appealing** *applications.*
- *It is a declarative language that allows* ***user interfaces*** *to be described in terms of their* ***visual components*** *and* ***how they interact and relate with one another.***
- *It is an highly readable language that was designed to enable* ***components*** *to be* **interconnected in a dynamic manner***, and it allows components to be* **easily reused and customized** *within a user interface.*

AEF Certified ISOBUS UT TECU AUX-N TC-BAS TC-GEO TC-SC ... ...
www.aef-isobus-database.org

Isobus è il protocollo normato che permette di gestire la **comunicazione tra trattori, software e attrezzature dei principali costruttori**, per consentire lo scambio di dati e informazioni con un linguaggio universale t**ramite un'unica console di comando** integrata nella cabina del trattore.

Il protocollo Isobus è il risultato da un accordo tra i principali produttori di macchine e attrezzature agricole per **risolvere i problemi di compatibilità**, standardizzando e normando la comunicazione **tra diversi macchinari**, indipendentemente dal produttore.

Con Isobus è possibile **controllare tutta l'attività della macchina e degli attrezzi** comodamente seduti in cabina raccogliendo i dati su un unico display.

Lo scambio di informazioni e dati offre infatti un insostituibile **supporto in tutte le operazioni**:

- permette di **governare gli attrezzi Isobus certificati**, come ad esempio seminatrici, trebbiatrici, irroratrici, ottimizzando la resa a seconda delle diverse condizioni di lavoro, grazie ai dati raccolti in tempo reale;
- **integrato a sistemi di precisione satellitare consente di visualizzare la superficie trattata** direttamente sul monitor;
- grazie ai sistemi di automazione, l'impiego dei sistemi di precisione satellitare consente di **risparmiare carburante, fitofarmaci** e di rispettare l'ambiente.

Il sistema Isobus permette quindi di **aumentare l'efficienza**, con una conseguente **riduzione dei costi**.

Isobus is the standard protocol *that makes possible to manage the* **communication between tractors, software and equipment of major manufacturers***, allowing the exchange of data and information with a universal language t****hrough a single control console*** *in the tractor's cab.*

The Isobus protocol is the result of an agreement between the main manufacturers of agricultural machinery and equipment to ***solve compatibility problems****, standardizing communication* ***among different*** *implements, regardless of the manufacturer.*

With Isobus it is possible to **control all the activities** *while staying comfortably seated in the cab, all the data being collected in a single display.*

The exchange of information and data offers an irreplaceable ***support for all operations****:*

- *It allows the* ***control of certified Isobus*** *implements including seed drills, balers and sprayers, optimizing the yield according to different working conditions thanks to the data collected in real time.*
- ***When integrated with precision satellite systems, it allows the viewing of the treated surface*** *directly on the monitor.*
- *Thanks to automation systems, the use of precision satellite systems saves fuel, protects the plant and the environment.*

The Isobus system therefore makes possible to **increase the efficiency** *with a consequent* **reduction in costs***.*

PIXTRO

PIXTRO è la rivoluzionaria esperienza e interfaccia utente di COBO **per i display TERA HE**.

Grazie alla potenza di QT, il framework PIXTRO offre un'**interfaccia grafica di infotainment** fluida e animata simile a quella automotive, composta in modo modulare da APP.

Ogni APP fornisce una **funzionalità completa:**

- Gestione delle chiamate telefoniche via Bluetooth
- Lettore multimediale
- Visualizzazione delle telecamere
- Controllo della modalità di funzionamento del motore e della macchina

L'operatore può decidere ed impostare in modo facile ed intuitivo se, dove e come queste APP sono visibili sul display, per una **completa personalizzazione delle informazioni mostrate** in base alla sua attività lavorativa.

La modularità intelligente di PIXTRO riduce il tempo necessario per progettare e sviluppare un'applicazione di interfaccia utente macchina, per un **breve time-to-market**.

PIXTRO is the revolutionary user experience and interface of COBO **for TERA HE displays**.

Thanks to the power of QT, PIXTRO framework delivers an automotive-like fluid and animated **infotainment graphics interface** *that is modularly composed by APPs.*

Each APP provides a **complete functionality:**

- *Bluetooth phone call management*
- *Media player*
- *Cameras displaying*
- *Engine and machine operating mode control*

The operator can decide and setup in an easy and intuitive way if, where and how these APPs are visible on the display, for a **complete customization of the information showed** *according to his work activity.*

The smart modularity of PIXTRO reduces the time needed to design and develop a machine user interface application, for a **short time-to-market**.

Note / *Notes*

Note / *Notes*

GERMANY

COBO DEUTSCHLAND GmbH
Zum Schürmannsgraben, 12E
D-47441 - Moers
Germany
Phone: +49 (0) 2841 88238 0
Fax: +49 (0) 2841 88238 23
E-mail: info@cobogroup.net
Web Site: www.cobo-deutschland.com

FRANCE

COBO FRANCE Sarl
Allée de l'Europe, 2 - Zone Coriolis
71210 - Ecuisses
France
Phone: +33 (0) 3 857 30560
Fax: +33 (0) 3 857 85606
E-mail: info@cobogroup.net
Web Site: www.cobofrance.com

NORTH AMERICA

COBO USA Corporation
West Division Street, 304
52655 - West Burlington
Iowa - Usa
Phone: +1 319 754 5585
Fax: +1 319 754 8724
E-mail: info@cobogroup.net
Web Site: www.cobointernational.com

LATIN AMERICA

COBO COMPONENTES AGR. E IND. Ltda
Rua Dona Francisca, 8300 - Bloco 2-M
89219-600 Zona Industrial - Joinville
Santa Catarina - Brasil
Phone: +55 47 3305 0095
E-mail: info@cobogroup.net
Web Site: www.cobogroup.net

OCEANIA

COBO OCEANIA Ltd
9/93 Burnside Road
Stapylton - Brisbane 4207
Queensland - Australia
Phone: +61 (0) 7 3807 4866
E-mail: info@cobogroup.net
Web Site: www.cobo.com.au

SOUTH-EAST ASIA

COBO ASIA Ltd
Way Yip Street, 133
11/F, 12/F and Roof Floor - Kwun Tong
Hong Kong
Phone: +852 3511 6708 (6709)
E-mail: info@cobogroup.net
Web Site: www.cobogroup.net

CHINA

COBO GUANGZHOU Ltd
Qiaotou Street, 226 - Beishan - Haizhu
51000 - Guangzhou
People's Republic of China
Phone: +86 20 8922 5611
Fax +86 20 8922 5635
E-mail: info@cobogroup.net
Web Site: www.cobochina.cn

INDIA

COBO INDIA Branch Office
Mathura Road, 13/6 - 4th floor, 403
121003 NH-2 - Faridabad
Haryana - India
Phone: +91 129 4871206
Email: info@cobogroup.net
Web Site: www.cobogroup.net

COBO
HEADQUARTERS

C.O.B.O. SpA
Via Tito Speri, 10
25024 Leno (Brescia) ITALY
Phone +39 030 90451

info@cobogroup.net | www.cobogroup.net

Le informazioni contenute nella presente informativa hanno scopo puramente indicativo.
L'Azienda si riserva senza preavviso il diritto di apportare qualsiasi modifica tecnica del prodotto.

The information published in this catalogue is purely indicative. The Company reserves the right to introduce all technological changes of the present product at any time and without prior notice.

Part Number 1099377 | Edition 2025 - Rev.02